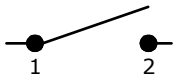

CIRCUIT: SPST

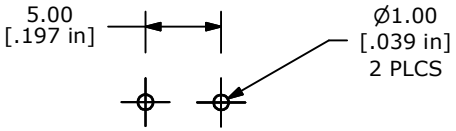

PCB LAYOUT

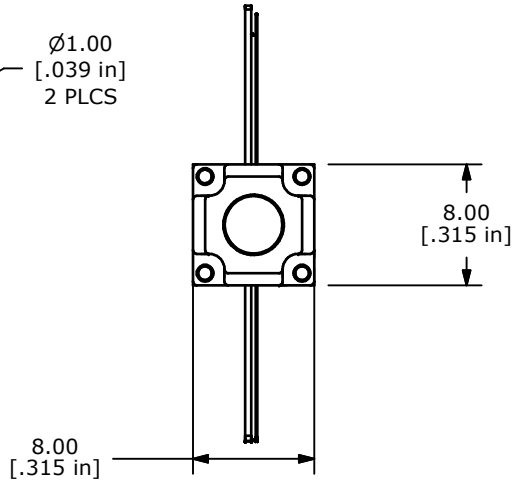

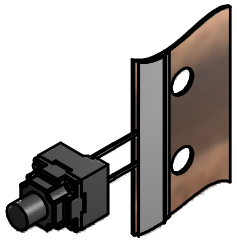

ISOMETRIC

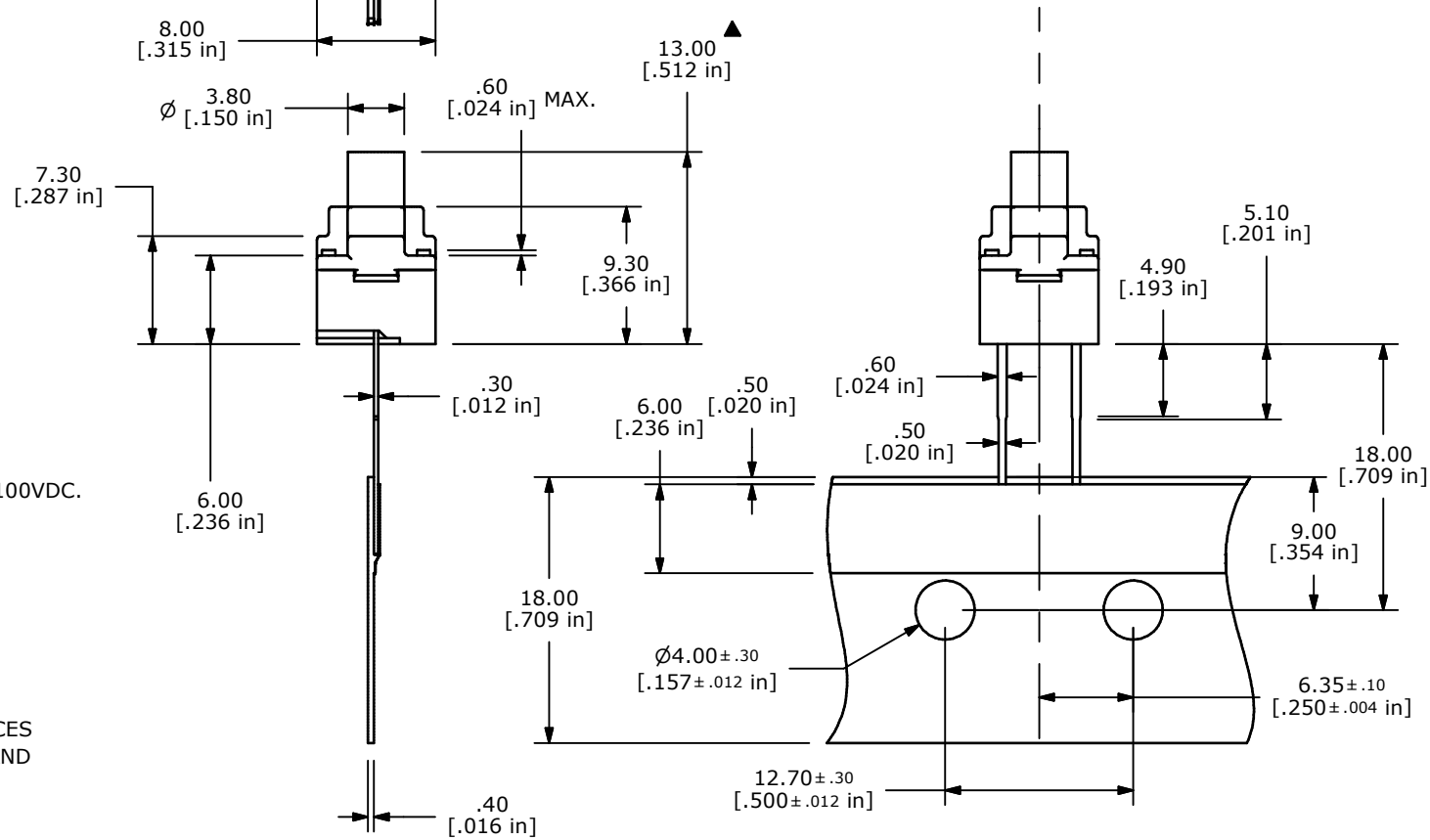

NOTES:
1. ALL DIMENSIONS IN MM [INCH]
2. GENERAL TOLERANCE: X.X=±0.4
   X.XX=±0.25
3. RATING: 12VDC @ 50mA
4. CONTACT RESISTANCE: 100mΩ MAX.
5. INSULATION RESISTANCE: 100MΩ MIN @100VDC.
6. ▲ OPERATING FORCE: 160 ± 50gf
7. ⓒ TRAVEL: 0.3 +0.1/-0.1mm
8. OPERATING TEMPURATURE: -25˚C TO 85˚C
9. OPEREATING LIFE: 100,000 CYCLES
10. SILVER CONTACTS.
11. SEALED TO IP67
12. ▲ DENOTES CRITICAL PARAMETERS
13. 2002/95/EC (ROHS) COMPLIANT
14. PARTS ARE RADIAL PACKAGED, 1000 PIECES PER PACK. PARTS ARE ZIG-ZAG FOLDED AND 1 SWITCH IS REMOVED AT EVERY FOLD.

REV	PCR NO	DESCRIPTION	DATE	BY
C	18747	CORRECT TOLERANCE IN NOTE #7	12/23/09	BLR
B	18734	chg travel tol from +.2/-.1	12/8/09	rc
A	18567	Release For Production	7/9/09	BLR

THE INFORMATION CONTAINED IN THIS DOCUMENT IS PROPRIETARY TO E-SWITCH AND IS NOT TO BE COPIED OR TRANSFERRED

E-SWITCH® | LAMB INDUSTRIES™

TITLE TL52AF160Q

SCALE	DATE	DR	DWG	REV
2=1	12/23/2009	BLR	P002001	C