DELTA ELECTRONICS, INC.

Model Name: FHS-A6025B01

Application:

- Intel Nehalem Socket 1366 2U
- Xeon (45nm) W5500/X5500/E5500/L5500 CPU sequence

Pictures

Thermal & Mechanical Spec.:

- Thermal performance for 130W CPU
- HSK Assembly Weight: 590 g (ref.)
- Clipping Force: 16 Kgf (ref.)

Component Specification:

1. Heat Sink

   Type: Cu/Al Fins + Cu Base + 4x Heatpipes

   Material: A1100/ADC12/C1100 or Equivalent.

   Dimension: 90*90*64 mm

2. Thermal interface material 2

   Material: Dow Corning TC-5630 or Equivalent.

3. Fan

   (60x60x25 mm with PWM Control)

   Rated Voltage: 12 V

   Life Time:

   Two ball bearing 80000 hrs

   Connector:

   a. Lead wire: UL 1061 AWG#26

      pin 1: black wire--------(-)

      pin 2: yellow wire----------(+)

      pin 3: green wire---------(F00)

      pin 4: blue wire----------(PWM)

   b. Housing: Molex 47054-1000 or equivalent

   c. Terminal: Molex 2759T 08-50-0113 or equivalent

* All readings are typical values at rated voltage.

** Specifications are subject to change without notice*

DELTA ELECTRONICS, INC.
252, Shang Ying Road, Kuei San
TAOYUAN SHIEN 333,
TAIWAN,R.O.C.
TEL: 886-3-3591968 EXT 2073
FAX: 886-3-3591991

DELTA PRODUCTS CORPORATION
4405 CUSHING PARKWAY
FREMONT, CA 94538, U.S.A.
TEL: 1-510-668-5100
FAX: 1-510-668-0680

DELTA ELECTRONICS(JAPAN), INC.
DELTA SHIBADAIMON BLDG.
2-1-14 SHIBADAIMON, MINATO-KU,
TOKYO, 105-0012, JAPAN
TEL: 81-3-5733-1111
FAX: 81-3-5733-1211

DELTA ELECTRONICS EUROPE LTD.
2 YOUNG PLACE
KELVIN INDUSTRIAL ESTATE
EAST KILBRIDE, GLASGOW G75 OTD, U.K.
TEL: 44-1355-588888
FAX: 44-1355-588889

Date: 27-Apr-07

Delta Electronics Corp.

APPROVAL SHEET

Customer Name .:

Model Name.: **COOLER**

Delta Part No.: **FHS-A6025B01**

Customer Part No.:

Spec Issue Date .: **12/31/2015**

Spec Revision : **02**

PLEASE SEND ONE COPY OF THIS SPECIFICATION BACK AFTER YOU SIGNED APPROVAL FOR PRODUCTION PRE-ARRANGMENT.

Approved By: _____

Date: _____

Approval	Check	Designer
Alex-Hsia	Alex-Hsia	Charles. Chen

Delta Electronics Corp.

REV.	Description	Drawn	Checked	Approved	Issue Date
00	**ISSUE SPEC**	Skyler-Huang01/05'10	Charles. Chen 01/05'09	Alex-Hsia 01/05'09	
01	1. CHANGE THE FAN P/N FROM 3620927211 TO 3620936511 2. CHANGE THE FAN LABEL P/N FROM 3266487800 TO 3266800100 3. MODIFY THE HEATPIPE P/N 4. CHANGE SCREW P/N FROM 3105464700 TO 3534205600 5. CORRECT THE CARTON SIZE	Skyler-Huang07/24'13	Charles. Chen 07/24'13	Charles. Chen 07/24'13	
02	Change TIM from TC-1996 to TC-5630	Charles. Chen 12/31'15	Alex-Hsia 12/31'15	Alex-Hsia 12/31'15	

Description:

SAMPLE REVISION CODE LIST

Part No.		REV
DELTA MODEL : FHS-A6025B01	TOTAL 33 PAGE	02

Delta Electronics Corp.

CONTENTS

Delta Electronics Corp.

1. SPECIFICATION

Characters

Item	Description
Scope	THIS SPECIFICATION DEFINES THE ELECTRICAL AND MECHANICAL CHARACTERISTICS OF THE FAN HEATSINK
Application	INTEL CPU COOLER
Specification	
a: Thermal Resistance	0.199 (℃/W) (REF.)
b: total weight	590g (REF.)
c: clip force	16 kgf (REF.)

BOM

Item	Part Name	Material	Part NO.	Q'TY	Remark
1	COVER	PC	3321021400	1	
2	FAN	PBT	3620936511	1	
3	HEATSINK	AL1050&CU1100	3346397100	1	
4	HEATPIPE	CU C1020	3460037000 3460037600 3460037700 3460037800	4	
5	SCREW	SUS	3534205600	4	
6	TIM	DOW TC-5630	4021107300	0.2 g	Rev02
7	SPRING	SWAP	3461809700	4	
8	CU BASE	CU1100	3346397300	1	
9	AL BASE	ADC12	3346397200	1	
10	FAN SCREW	SUS	3109182300	2	
11	E-CLIP	S20C	3110262800	4	

2. PRINT

Assembly Drawing

Parts Drawing

DRAWING:

UNIT: mm (INCH)

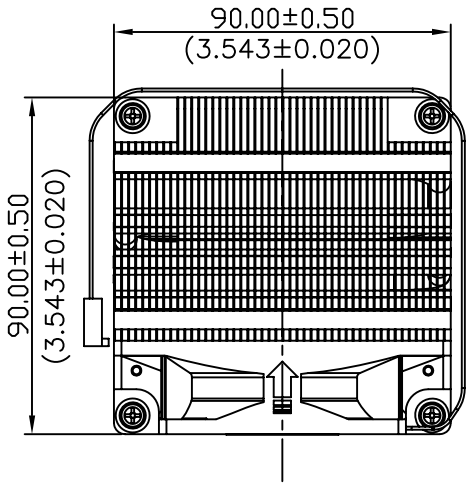

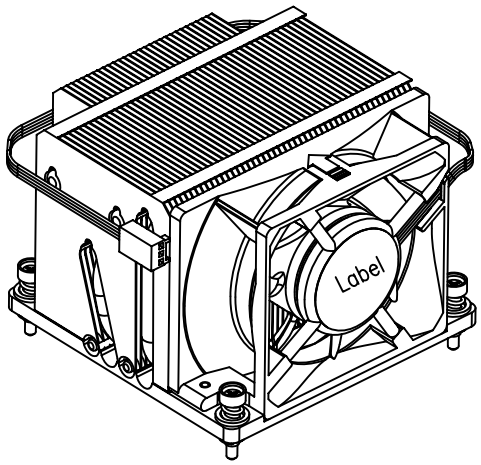

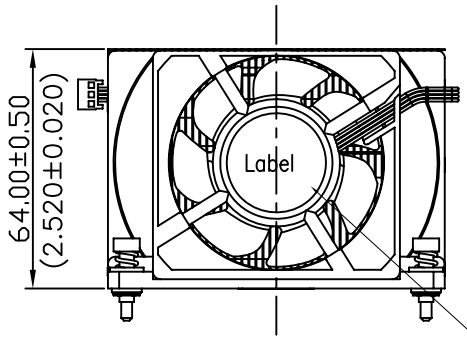

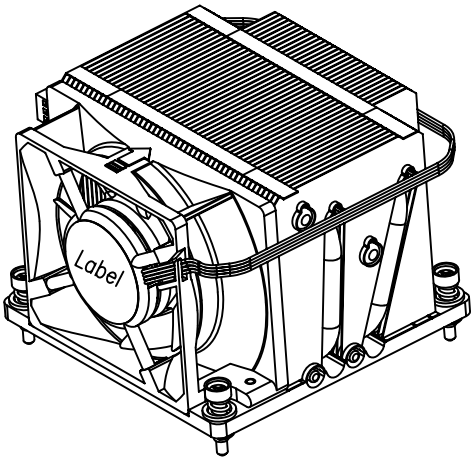

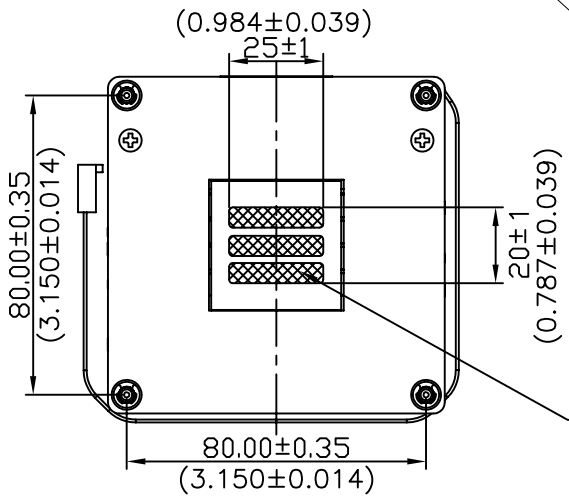

FAN LABEL P/N:~~3266487800~~
1 3266800100

2
Dow Corning TC-5630 P/N:4021107300

TIM WEIGHT ON HSK MUST BE 200mg±30mg

台達電子工業股份有限公司 DELTA ELECTRONICS, INC.	DELTA MODEL: FHS-A6025B01	Drawn: Charles Chen
THESE DRAWINGS AND SPECIFICATIONS ARE THE PROPERTY OF DELTA ELECTRONICS, INC. AND SHALL NOT BE REPRODUCED OR USED AS THE BASIS FOR THE MANUFACTURE OR SELL OF APPARATUSES OR DEVICES WITHOUT PERMISSION.	CUSTOMER NAME: -------	
	CUSTOMER P/N: -------	

DIMENSIONAL TOLERANCES HOLES : ±0.05 ANGLES : ±0.5°

( )		( )		( )				( )	
<30	±0.25	DECIMALS		UP~100	±0.2	250~300	±0.4	UP~600	±1.5
>30~100	±0.35	X	±0.3	100~150	±0.25	300~350	±0.45	600~900	±2.4
>100~300	±0.5	X.X	±0.2	150~200	±0.3	350~400	±0.5	900~OVER	±3.1
ABOVE 300	±0.6	X.XX	±0.1	200~250	±0.35				

SCALE	---	UNIT	---	USED ON	COOLER

THIRD ANGLE PROJECTION

A4 SIZE

Description: PRODUCTION SPEC. (PHYSICAL DIMENSION)

Part No. FHS-A6025B01-PD

REV. 02

SHEET 1 OF 2

ISSUE DATE:

FRAME NAME : DF-PSLA4V-3R01.DWG

DRAWING:

UNIT: mm (INCH)

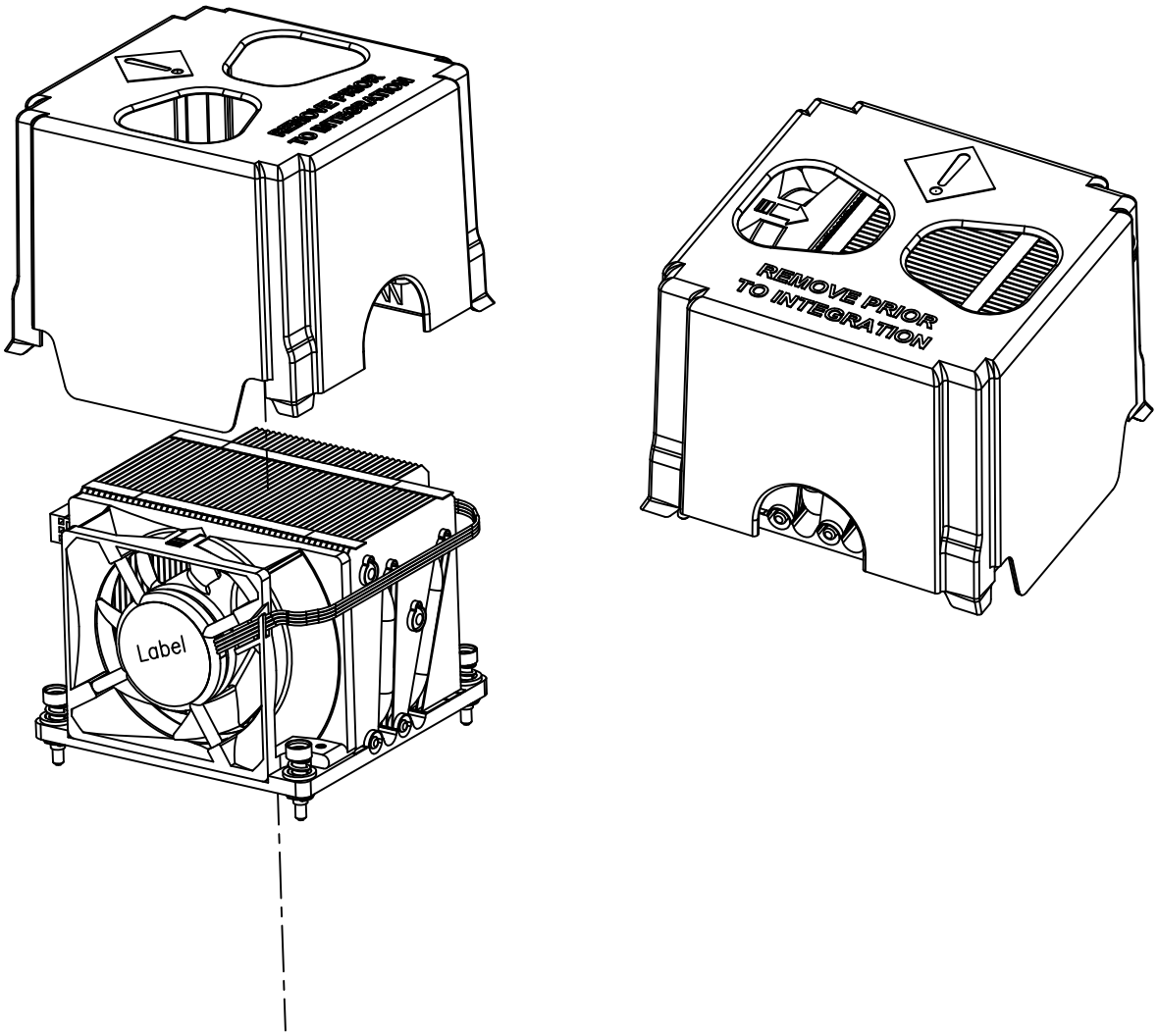

台達電子工業股份有限公司
DELTA ELECTRONICS, INC.

DIMENSIONAL TOLERANCES HOLES : ±0.05 ANGLES : ±0.5°

( )		( )		( )				( )	
<30	:±0.25	DECIMALS		UP~100	:±0.2	250~300	:±0.4	UP~600	:±1.5
>30~100	:±0.35	X	:±0.3	100~150	:±0.25	300~350	:±0.45	600~900	:±2.4
>100~300	:±0.5	X.X	:±0.2	150~200	:±0.3	350~400	:±0.5	900~OVER	:±3.1
ABOVE 300	:±0.6	X.XX	:±0.1	200~250	:±0.35				

SCALE	---	UNIT	---	USED ON	COOLER

DELTA MODEL: FHS-A6025B01

Drawn: Charles Chen

CUSTOMER NAME: -------

CUSTOMER P/N: -------

THIRD ANGLE PROJECTION

Description: PRODUCTION SPEC. (PHYSICAL DIMENSION)

A4 SIZE

Part No. FHS-A6025B01-PD

REV. 02

SHEET 2 OF 2

ISSUE DATE:

FRAME NAME : DF-PSLA4V-3R01.DWG

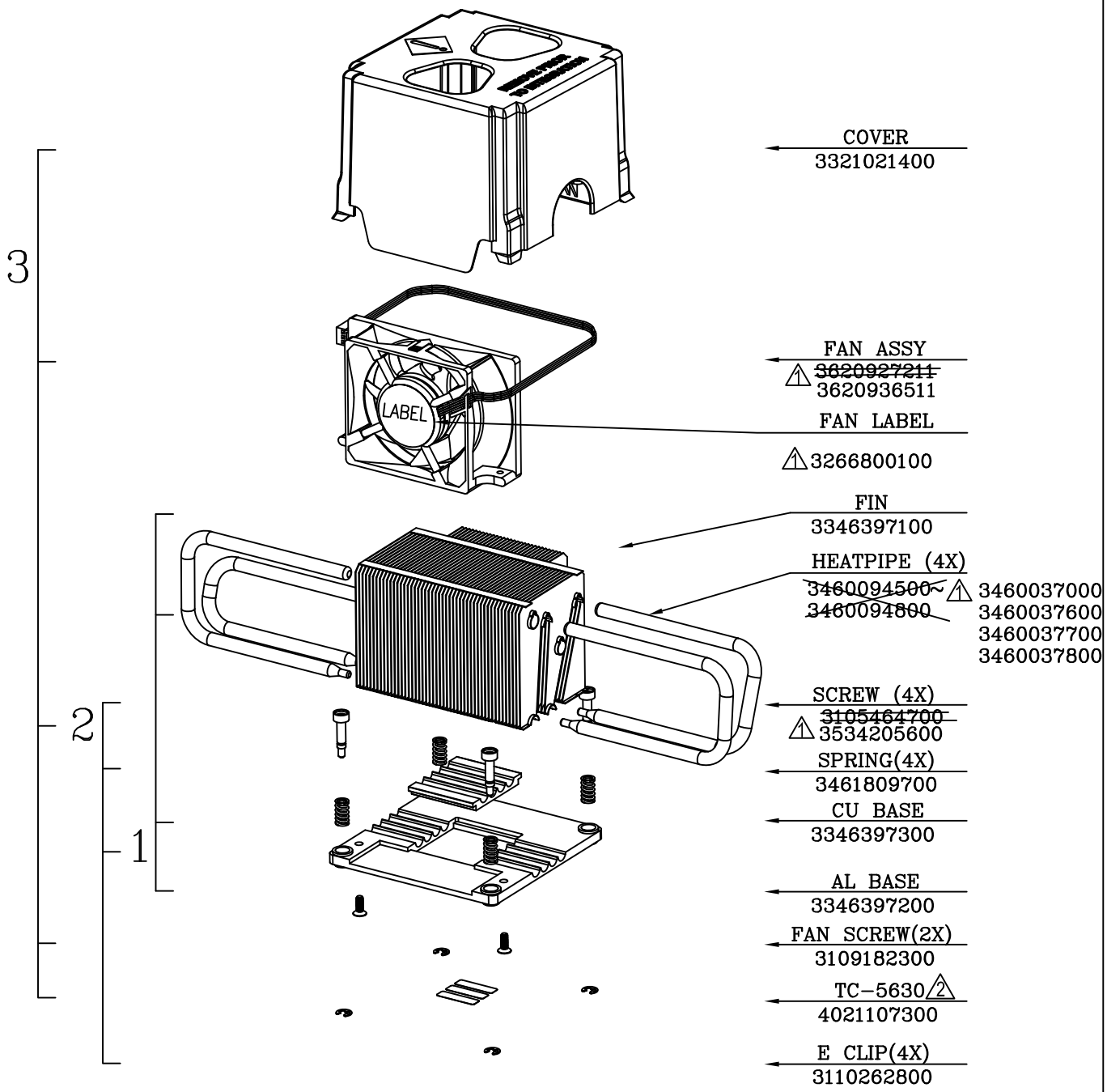

台達電子工業股份有限公司
DELTA ELECTRONICS, INC.

DELTA MODEL: FHS-A6025B01

Drawn: Charles Chen

CUSTOMER NAME: -------

CUSTOMER P/N: -------

DIMENSIONAL TOLERANCES

HOLES : ±0.05 ANGLES : ±0.5°

( )		( )		( )				( )	
<30	±0.25	DECIMALS		UP~100	±0.2	250~300	±0.4	UP~600	±1.5
>30~100	±0.35	X	±0.3	100~150	±0.25	300~350	±0.45	600~900	±2.4
>100~300	±0.5	X.X	±0.2	150~200	±0.3	350~400	±0.5	900~OVER	±3.1
ABOVE 300	±0.6	X.XX	±0.1	200~250	±0.35				

THIRD ANGLE PROJECTION

Description: PRODUCTION SPEC. (ASSEMBLY ORDER)

A4 SIZE

Part No. FHS-A6025B01-AS

REV. 02

SCALE	---	UNIT	---	USED ON	COOLER

SHEET 1 OF 1

ISSUE DATE:

FRAME NAME : DF-PSLA4V-3R01.DWG

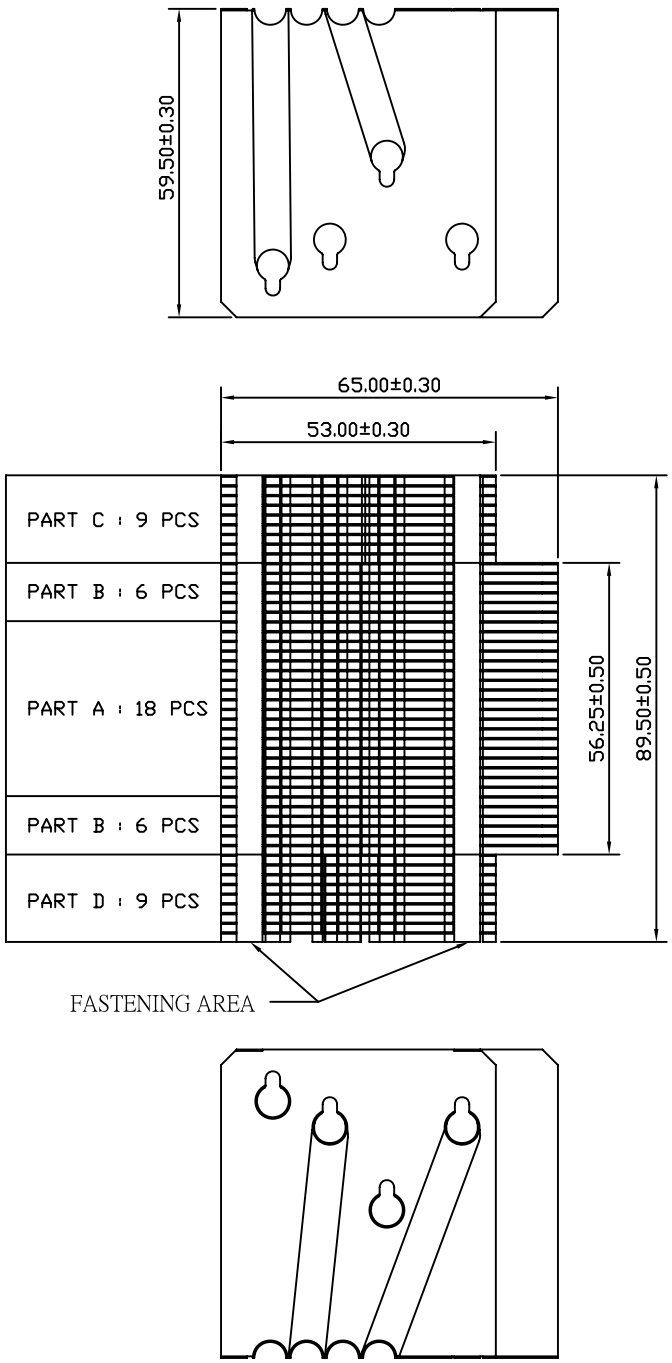

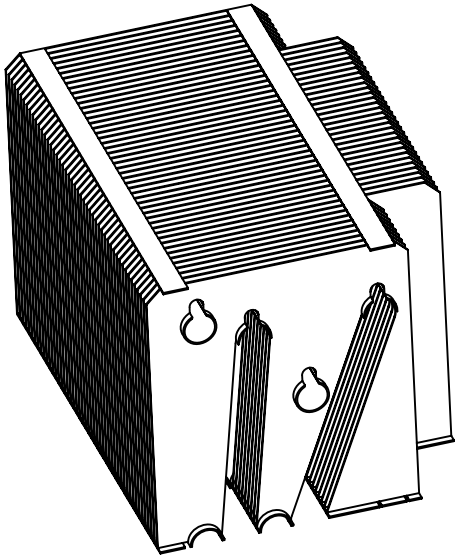

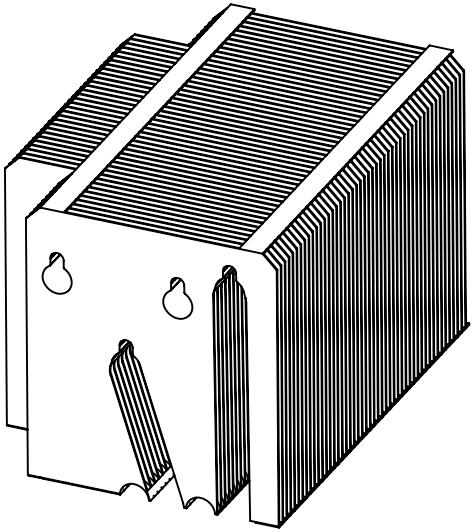

*1.SAMPLE TO BE SUBMITTED FOR DELTA ENGINEERING APPROVAL. PRODUCTION TO BE IN ACCORDANCE WITH APPROVAL SAMPLE.
*2.REMOVE ALL BURRS AND SHARP EDGES. SURFACE TO BE FREE FROM CONTAMINANTS.
*3.DEGREASED PART SHOULD BE FREE OF LOOSE PARTICLE.
*4.UNDEFINED RADII IS SMALLER THAN 0.5R UNLESS OTHERWISE SPECIFIED.

台達電子工業股份有限公司
DELTA ELECTRONICS, INC.

THIRD ANGLE PROJECTION

DIMENSIONAL TOLERANCES

HOLES : ±0.05 ANGLES : ±0.5°

( )		(✓)		( )				( )	
<30	±0.25	DECIMALS		UP~100	±0.2	250~300	±0.4	UP~600	±1.5
>30~100	±0.35	X	±0.5	100~150	±0.25	300~350	±0.45	600~900	±2.4
>100~300	±0.5	X.X	±0.4	150~200	±0.3	350~400	±0.5	900~OVER	±3.1
ABOVE 300	±0.6	X.XX	±0.3	200~250	±0.35				

SCALE	1/1	UNIT	mm	USED ON	COOLER

A3 SIZE

Drawn: Skyler Huang

DESCRIPTION: HEATSINK

PART NO.: 3346397100

REV. --

SHEET 1 OF 5

DF-MEA3H-4R00

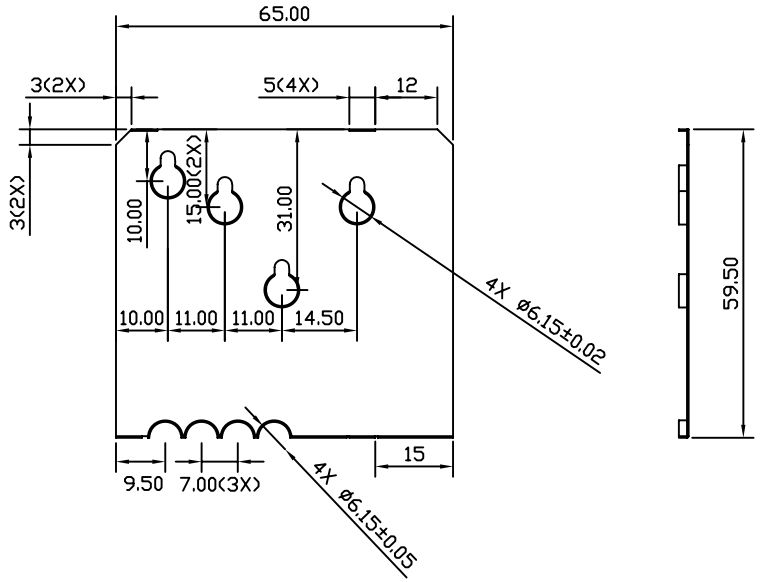

PART A

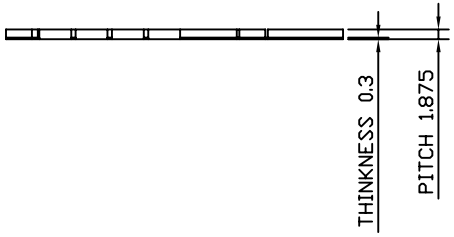

NOTES:

*1.MATERIAL:C1100,THICKNESS 0.3±0.05 MM
FINISH:NICKEL-PLATING

台達電子工業股份有限公司
DELTA ELECTRONICS, INC.

THIRD ANGLE PROJECTION

DIMENSIONAL TOLERANCES

HOLES : ±0.05 ANGLES : ±0.5°

( )		(✓)		( )				( )	
<30	±0.25	DECIMALS		UP~100	±0.2	250~300	±0.4	UP~600	±1.5
>30~100	±0.35	X	±0.5	100~150	±0.25	300~350	±0.45	600~900	±2.4
>100~300	±0.5	X.X	±0.4	150~200	±0.3	350~400	±0.5	900~OVER	±3.1
ABOVE 300	±0.6	X.XX	±0.3	200~250	±0.35				

SCALE	1/1	UNIT	mm	USED ON	COOLER

A3 SIZE

Drawn: Skyler Huang

DESCRIPTION: HEATSINK

PART NO.: 3346397100

REV. --

SHEET 2 OF 5

DF-MEA3H-4R00

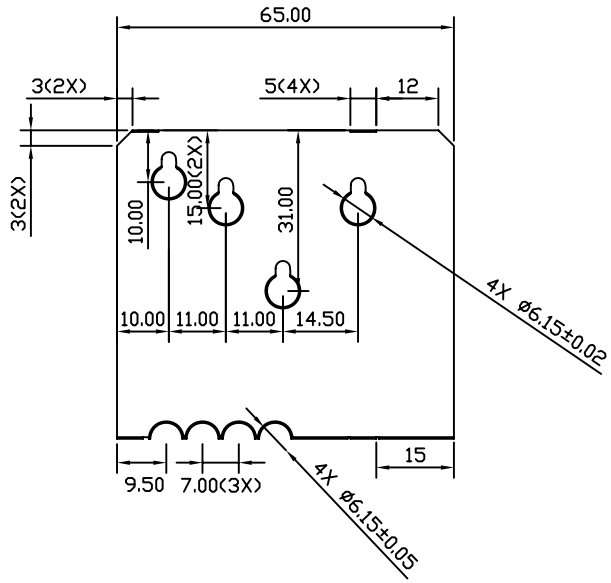

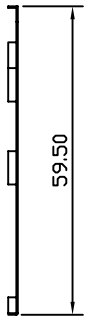

PART B

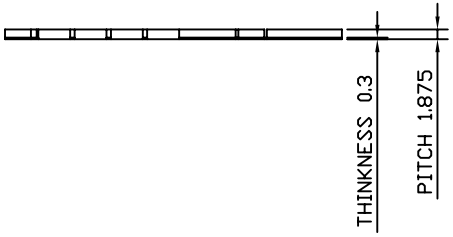

NOTES:

*1.MATERIAL:ALUMINUM AL1050 OR AL1100,THICKNESS 0.3±0.05 MM
FINISH:NICKEL-PLATING

台達電子工業股份有限公司
DELTA ELECTRONICS, INC.

THIRD ANGLE PROJECTION

DIMENSIONAL TOLERANCES

HOLES : ±0.05 ANGLES : ±0.5°

( )		(✓)		( )				( )	
<30	±0.25	DECIMALS		UP~100	±0.2	250~300	±0.4	UP~600	±1.5
>30~100	±0.35	X	±0.5	100~150	±0.25	300~350	±0.45	600~900	±2.4
>100~300	±0.5	X.X	±0.4	150~200	±0.3	350~400	±0.5	900~OVER	±3.1
ABOVE 300	±0.6	X.XX	±0.3	200~250	±0.35				

SCALE	1/1	UNIT	mm	USED ON	COOLER

A3 SIZE

Drawn: Skyler Huang

DESCRIPTION: HEATSINK

PART NO.: 3346397100

REV. --

SHEET 3 OF 5

DF-MEA3H-4R00

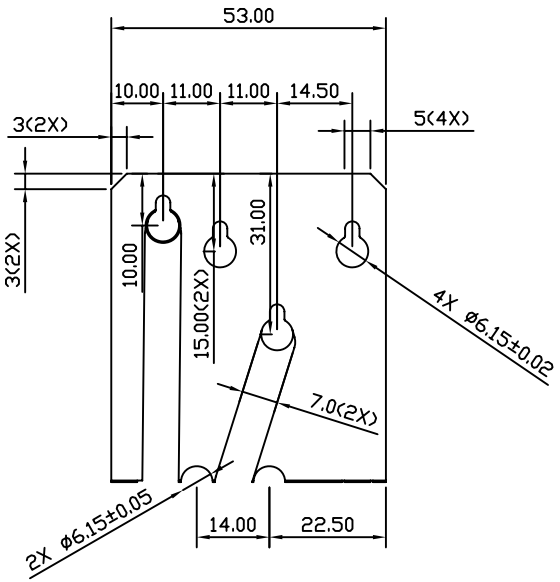

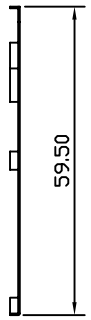

PART C

NOTES:

*1.MATERIAL:ALUMINUM AL1050 OR AL1100,THICKNESS 0.3±0.05 MM
FINISH:NICKEL-PLATING

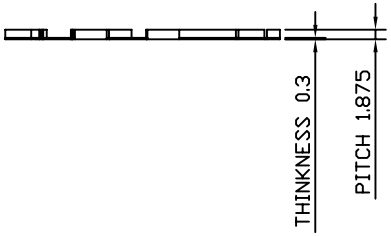

台達電子工業股份有限公司
DELTA ELECTRONICS, INC.

THIRD ANGLE PROJECTION

DIMENSIONAL TOLERANCES HOLES : ±0.05 ANGLES : ±0.5°

( )		(√)		( )				( )	
<30	±0.25	DECIMALS		UP~100	±0.2	250~300	±0.4	UP~600	±1.5
>30~100	±0.35	X	±0.5	100~150	±0.25	300~350	±0.45	600~900	±2.4
>100~300	±0.5	X.X	±0.4	150~200	±0.3	350~400	±0.5	900~OVER	±3.1
ABOVE 300	±0.6	X.XX	±0.3	200~250	±0.35				

SCALE	1/1	UNIT	mm	USED ON	COOLER

A3 SIZE

Drawn: Skyler Huang

DESCRIPTION: HEATSINK

PART NO.: 3346397100

REV. --

SHEET 4 OF 5

DF-MEA3H-4R00

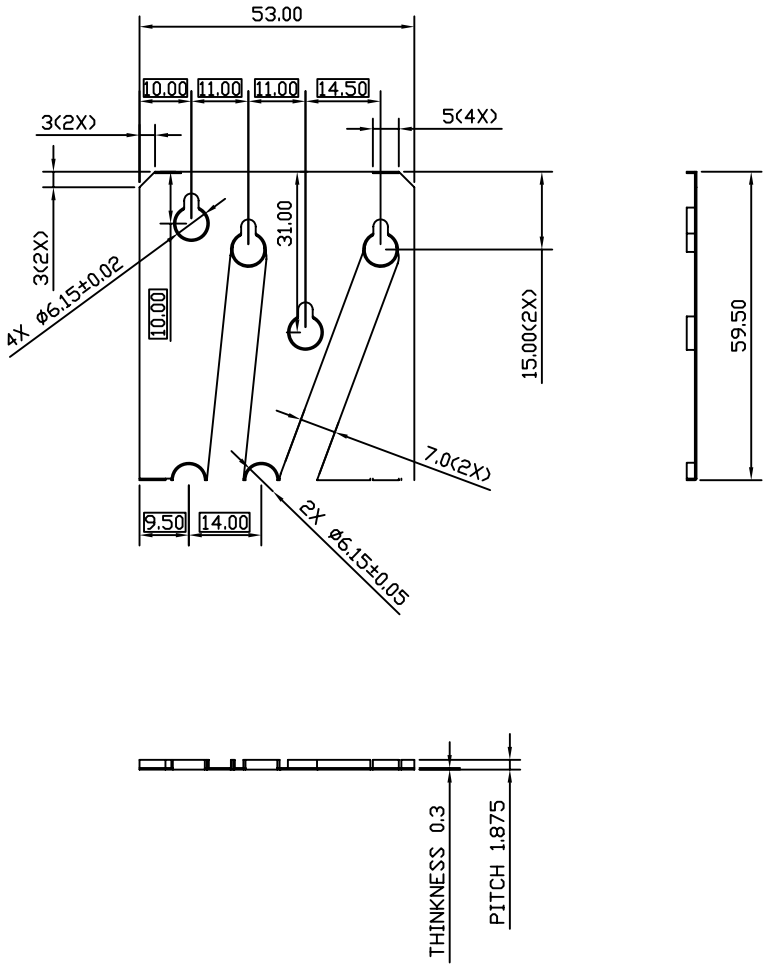

PART D

NOTES:

*1.MATERIAL:ALUMINUM AL1050 OR AL1100,THICKNESS 0.3±0.05 MM
FINISH:NICKEL-PLATING

台達電子工業股份有限公司
DELTA ELECTRONICS, INC.

THIRD ANGLE PROJECTION

DIMENSIONAL TOLERANCES

HOLES : ±0.05 ANGLES : ±0.5°

( )		(√)		( )				( )	
<30	±0.25	DECIMALS		UP~100	±0.2	250~300	±0.4	UP~600	±1.5
>30~100	±0.35	X	±0.5	100~150	±0.25	300~350	±0.45	600~900	±2.4
>100~300	±0.5	X.X	±0.4	150~200	±0.3	350~400	±0.5	900~OVER	±3.1
ABOVE 300	±0.6	X.XX	±0.3	200~250	±0.35				

SCALE	1/1	UNIT	mm	USED ON	COOLER

A3 SIZE

Drawn: Skyler Huang

DESCRIPTION: HEATSINK

PART NO.: 3346397100

REV. --

SHEET 5 OF 5

DF-MEA3H-4R00

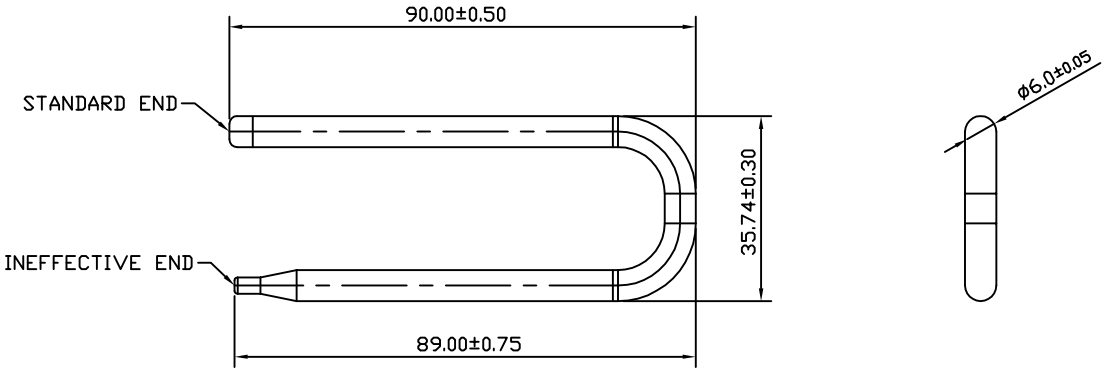

NOTES:

1.MATERIAL OF CONTAINER:ϕ6mm OFHC(C1020),
FINISH:NONE

台達電子工業股份有限公司
DELTA ELECTRONICS, INC.

THIRD ANGLE PROJECTION

DIMENSIONAL TOLERANCES

HOLES : ±0.05 ANGLES : ±0.5°

( )		(V) DECIMALS		( )				( )	
<30	±0.25	X	±0.3	UP~100	±0.2	250~300	±0.4	UP~600	±1.5
>30~100	±0.35	X.X	±0.2	100~150	±0.25	300~350	±0.45	600~900	±2.4
>100~300	±0.5	X.XX	±0.1	150~200	±0.3	350~400	±0.5	900~OVER	±3.1
ABOVE 300	±0.6			200~250	±0.35				

SCALE		UNIT		USED ON	

A3 SIZE

Drawn: Skyler Huang

DESCRIPTION: HEATPIPE

PART NO.: 3460037000

REV. 00

SHEET 1 OF 1

FRAME NAME : DF-MEA3H-4R01.DWG

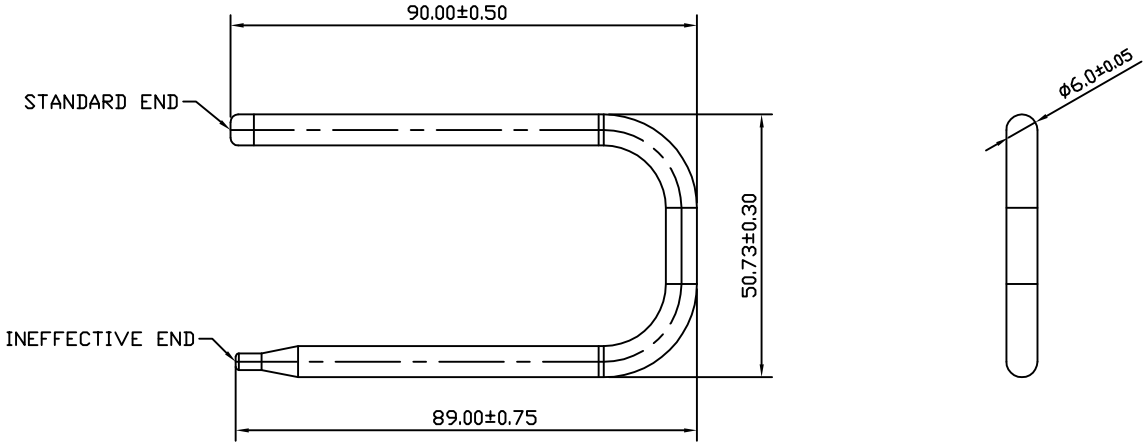

NOTES:

1.MATERIAL OF CONTAINER:ϕ6mm OFHC(C1020),
FINISH:NONE

台達電子工業股份有限公司
DELTA ELECTRONICS, INC.

THIRD ANGLE PROJECTION

DIMENSIONAL TOLERANCES

HOLES : ±0.05 ANGLES : ±0.5°

( )		(V)		( )				( )	
<30	±0.25	DECIMALS		UP~100	±0.2	250~300	±0.4	UP~600	±1.5
>30~100	±0.35	X	±0.3	100~150	±0.25	300~350	±0.45	600~900	±2.4
>100~300	±0.5	X.X	±0.2	150~200	±0.3	350~400	±0.5	900~OVER	±3.1
ABOVE 300	±0.6	X.XX	±0.1	200~250	±0.35				

SCALE		UNIT		USED ON	

A3 SIZE

Drawn: Skyler Huang

DESCRIPTION: HEATPIPE

PART NO.: 3460037600

REV. 00

SHEET 1 OF 1

FRAME NAME : DF-MEA3H-4R01.DWG

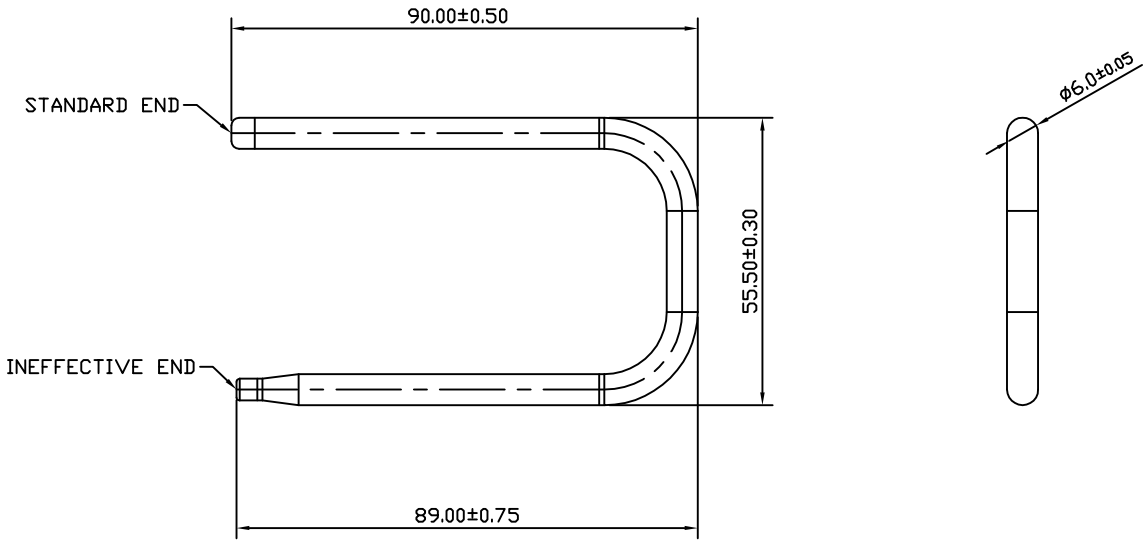

NOTES:

1.MATERIAL OF CONTAINER:ϕ6mm OFHC(C1020),
FINISH:NONE

台達電子工業股份有限公司
DELTA ELECTRONICS, INC.

THIRD ANGLE PROJECTION

DIMENSIONAL TOLERANCES

HOLES : ±0.05 ANGLES : ±0.5°

( )		(V)		( )				( )	
<30	±0.25	DECIMALS		UP~100	±0.2	250~300	±0.4	UP~600	±1.5
>30~100	±0.35	X	±0.3	100~150	±0.25	300~350	±0.45	600~900	±2.4
>100~300	±0.5	X.X	±0.2	150~200	±0.3	350~400	±0.5	900~OVER	±3.1
ABOVE 300	±0.6	X.XX	±0.1	200~250	±0.35				

SCALE		UNIT		USED ON	

A3 SIZE

Drawn: Skyler Huang

DESCRIPTION: HEATPIPE

PART NO.: 3460037700

REV. 00

SHEET 1 OF 1

FRAME NAME : DF-MEA3H-4R01.DWG

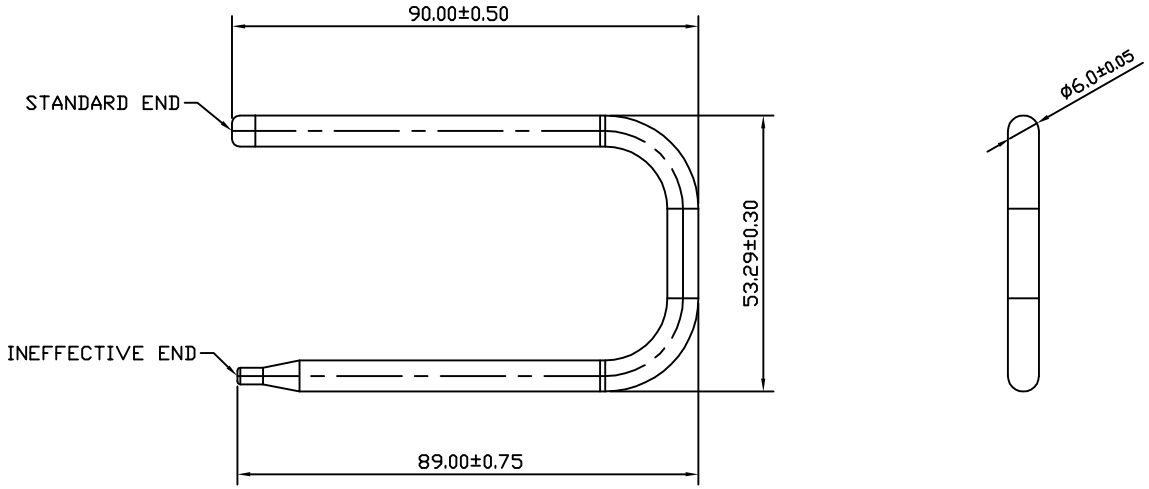

NOTES:

1.MATERIAL OF CONTAINER: 6mm OFHC(C1020),
FINISH:NONE

台達電子工業股份有限公司
DELTA ELECTRONICS, INC.

THIRD ANGLE PROJECTION

DIMENSIONAL TOLERANCES

HOLES : ±0.05 ANGLES : ±0.5°

( )		(V)		( )				( )	
<30	±0.25	DECIMALS		UP~100	±0.2	250~300	±0.4	UP~600	±1.5
>30~100	±0.35	X	±0.3	100~150	±0.25	300~350	±0.45	600~900	±2.4
>100~300	±0.5	X.X	±0.2	150~200	±0.3	350~400	±0.5	900~OVER	±3.1
ABOVE 300	±0.6	X.XX	±0.1	200~250	±0.35				

SCALE		UNIT		USED ON	

A3 SIZE

Drawn: Skyler Huang

DESCRIPTION: HEATPIPE

PART NO.: 3460037800

REV. 00

SHEET 1 OF 1

FRAME NAME : DF-MEA3H-4R01.DWG

DRAWING:

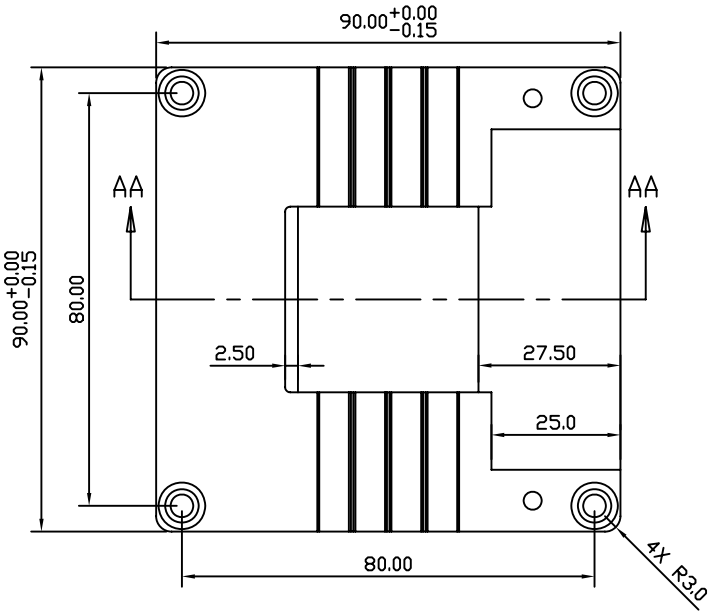

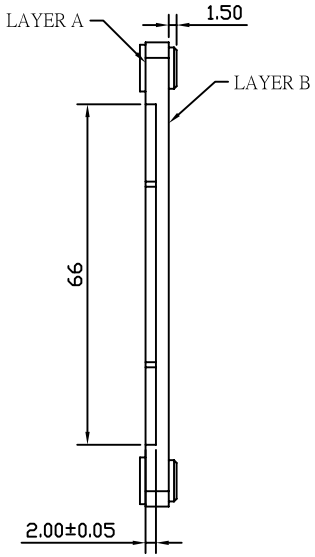

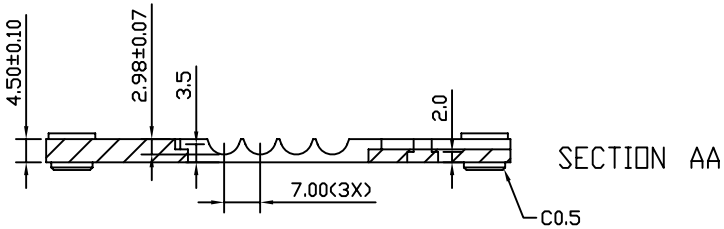

SECTION AA

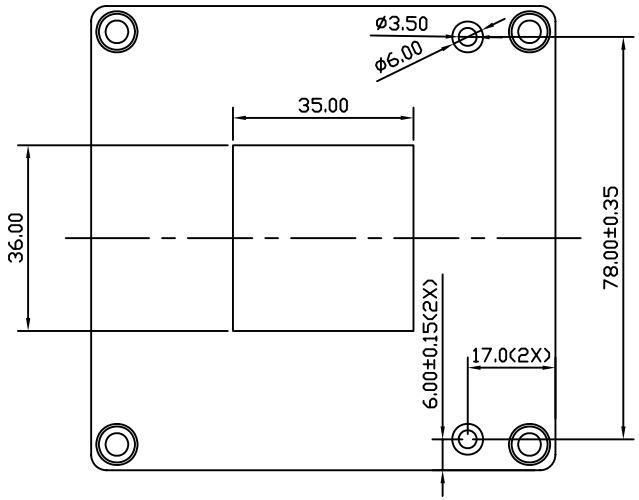

NOTES:
*1.MATERIAL: ADC12

台達電子工業股份有限公司 DELTA ELECTRONICS, INC.						Drawn: Skyler Huang	
THESE DRAWINGS AND SPECIFICATIONS ARE THE PROPERTY OF DELTA ELECTRONICS, INC. AND SHALL NOT BE REPRODUCED OR USED AS THE BASIS FOR THE MANUFACTURE OR SELL OF APPARATUSES OR DEVICES WITHOUT PERMISSION.					THIRD ANGLE PROJECTION	DESCRIPTION: AL BASE	
DIMENSIONAL TOLERANCES ( ) <30 ±0.25 >30~100 ±0.35 >100~300 ±0.5 ABOVE 300:±0.6 (✓) DECIMALS X ±0.5 X.X ±0.4 X.XX:±0.30 ( ) UP~100 ±0.2 100~150 ±0.25 150~200 ±0.3 200~250:±0.35 250~300 ±0.4 300~350 ±0.45 350~400 ±0.5 ( ) UP~600 ±1.5 600~900 ±2.4 900~OVER ±3.1 HOLES : ±0.05 ANGLES : ±0.5°					A3 SIZE	PART NO.: 3346397200	REV. --
SCALE 1/1	UNIT mm	USED ON COOLER				SHEET 1 OF 1	

DF-MEA3H-4R00

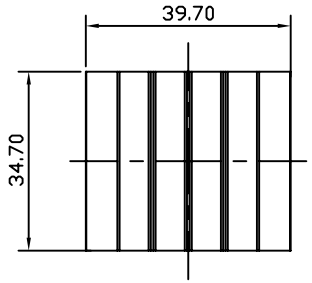

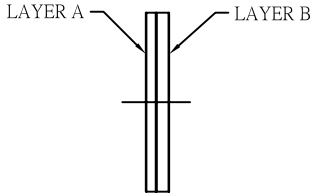

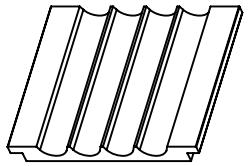

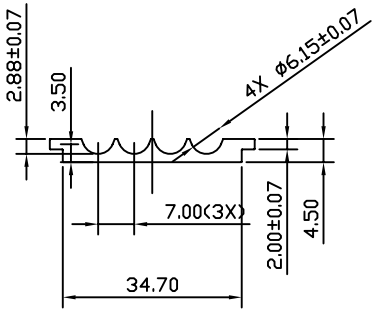

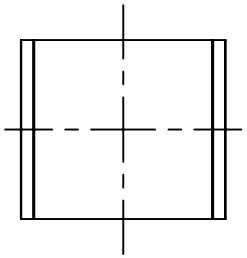

NOTES:

*1.MATERIAL: CU C1100, MIN THERMAL CONDUCTIVITY 390 W/(m K)
THE CONDUCTIVE RATE MUST BE HIGHER THAN 95% IACS

台達電子工業股份有限公司
DELTA ELECTRONICS, INC.

THIRD ANGLE PROJECTION

DIMENSIONAL TOLERANCES

HOLES : ±0.05 ANGLES : ±0.5°

( )		(✓)		( )		( )	
<30	±0.25	DECIMALS		UP~100	±0.2	250~300	±0.4	UP~600	±1.5
>30~100	±0.35	X	±0.5	100~150	±0.25	300~350	±0.45	600~900	±2.4
>100~300	±0.5	X.X	±0.4	150~200	±0.3	350~400	±0.5	900~OVER	±3.1
ABOVE 300	±0.6	X.XX	±0.30	200~250	±0.35				

SCALE	1/1	UNIT	mm	USED ON	COOLER

A3 SIZE

Drawn: Skyler Huang

DESCRIPTION: CU BASE

PART NO.: 3346397300

REV. --

SHEET 1 OF 1

DF-MEA3H-4R00

3. PACKING PLAN

Packing Specification

CARTON ILLUSTRATE	SIZE	450(L)*337(w)*196(H)(mm) △	PACKING QUANTITY	2LAYERS/CARTON
	MATERIAL	3 LAYERS"AB" FLUTE	CARTON WEIGHT	0.62 kg (REF.)

CARTON OUTSIDE DEMONDTRATE

FRONT

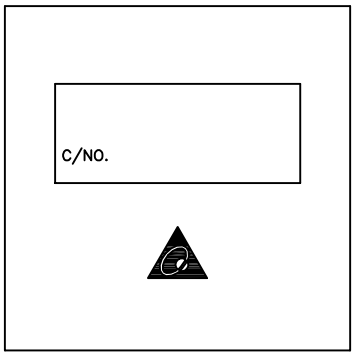

BACK

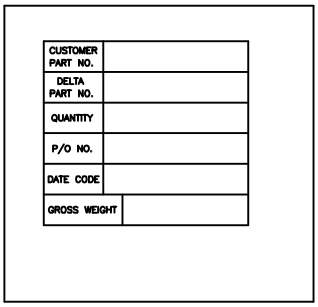

(ONE LABEL PER CARTON)

PET TRAY PACKING ILLUSTRATE	SIZE	104(L)*104(w)*18.5(H)(mm)	PACKING QUANTITY	1PCS/PET TRAY
	MATERIAL	PET TRAY		
	MATERIAL WEIGHT	6g (REF.)		

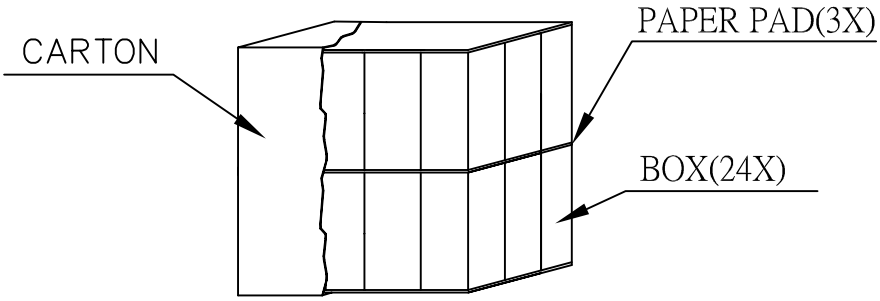

台達電子工業股份有限公司
DELTA ELECTRONICS, INC.

DIMENSIONAL TOLERANCES HOLES : ±0.05 ANGLES : ±0.5°

( )		( )		( )		( )	
<30	:±0.25	DECIMALS		UP~100	:±0.2	250~300	:±0.4	UP~600	:±1.5
>30~100	:±0.35	X	:±0.3	100~150	:±0.25	300~350	:±0.45	600~900	:±2.4
>100~300	:±0.5	XX	:±0.2	150~200	:±0.3	350~400	:±0.5	900~OVER	:±3.1
ABOVE 300	:±0.6	X.XX	:±0.1	200~250	:±0.35				

SCALE	---	UNIT	mm	USED ON	COOLER

DELTA MODEL: FHS-A6025B01

Drawn: Skyler 07/24'13

CUSTOMER NAME: -----

CUSTOMER P/N: -----

THIRD ANGLE PROJECTION

A4 SIZE

Description: PRODUCTION SPEC. (PACKING ASSMEBLY)

Part No. FHS-A6025B01-PA

REV. 01

SHEET 1 OF 2

ISSUE DATE:

PART NO.	FHS-A6025B01			
BASIC DATA	QUANTITY/CARTON	24PCS (2 LAYERS/CARTON, 12PCS/LAYER)		
	PRODUCTION NET WEIGHT	14.2kg (REF.)		
	PRODUCTION GROSS WEIGHT	16kg (REF.)		
20(ft)CONTAINER ILLUSTRATE	SIZE	5.889(L)*2.352(w)*2.386(H)m	PACKING QUANTITY	20PALLETS/CONTAINER
	CONTAINER	STEEL		

CONTAINER FORM

CONTAINER LOADING MATHOD

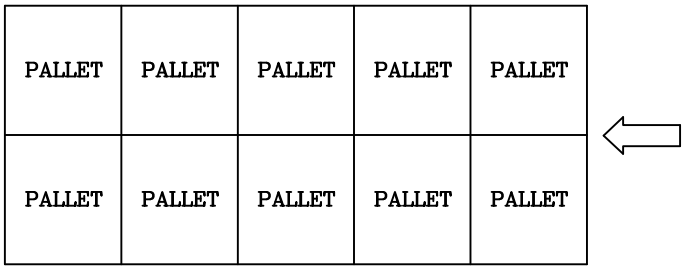

TOP VIEW

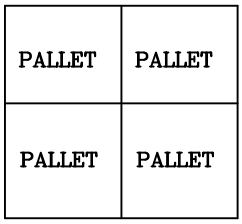

FRONT VIEW

PALLET LOADING ILLUSTRATE	SIZE	117(L)*107(w)*13(H)cm	PACKING QUANTITY	24 CARTONS/PALLET
	PALLET	WOOD		

PALLET ILLUSTRATE

PALLET LOADING MATHOD

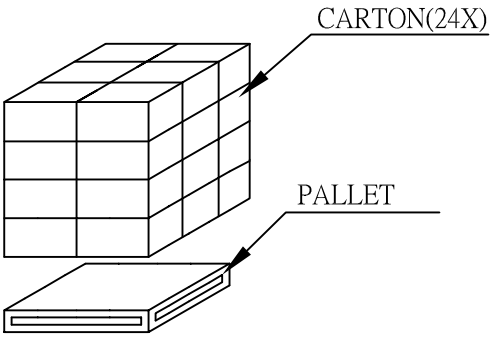

台達電子工業股份有限公司
DELTA ELECTRONICS, INC.

DIMENSIONAL TOLERANCES HOLES : ±0.05 ANGLES : ±0.5°

( )		( )	( )			( )	
<30	:±0.25	DECIMALS	UP~100	:±0.2	250~300	:±0.4	UP~600 :±1.5
>30~100	:±0.35	X :±0.3	100~150	:±0.25	300~350	:±0.45	600~900 :±2.4
>100~300	:±0.5	XX :±0.2	150~200	:±0.3	350~400	:±0.5	900~OVER :±3.1
ABOVE 300	:±0.6	X.XX:±0.1	200~250	:±0.35			

SCALE	---	UNIT	mm	USED ON	COOLER

DELTA MODEL: FHS-A6025B01	Drawn: Skyler 07/24'13	
CUSTOMER NAME: -----		
CUSTOMER P/N: -----		
THIRD ANGLE PROJECTION	Description: PRODUCTION SPEC. (PACKING ASSMEBLY)	
A4 SIZE	Part No. FHS-A6025B01-PA	REV. 01
	SHEET 2 OF 2	ISSUE DATE:

DF-PSLA4V-3R00

4. FAN

Fan Specification

SPECIFICATION FOR APPROVAL

Customer_____TMPBU_____

Description_____DC FAN_____

Part No. _____3620936511_____REV. _____

Delta Model No.__AFB0612DH-BC01____REV. __01_____

Sample Issue No._____

Sample Issue Date__AUG.13.2012_____

PLEASE SEND ONE COPY OF THIS SPECIFICAITON BACK AFTER YOU SIGNED APPROVAL FOR PRODUCTION PRE-ARRANGMENT.

APPROVED BY:_____

DATE :_____

DELTA ELECTRONICS, INC.
TAOYUAN PLANT
252, SHANG YING ROAD, KUEI SAN INDUSTRIAL ZONE TAOYUAN SHIEN, TAIWAN, R.O.C.
TEL:886-(0)3-3591968
FAX:886-(0)3-3591991

DELTA ELECTRONICS, INC.
252, SHANG YING ROAD, KUEI SAN
TAOYUAN SHIEN 333, TAIWAN, R. O. C.
TEL : 886-(0)3-3591968
FAX : 886-(0)3-3591991

SPECIFICATION FOR APPROVAL

****

Customer:	TMPBU		
Description:	DC FAN		
Customer P/N:	3620936511	REV:	
Delta Model NO.:	AFB0612DH-BC01	**Delta Safety Model NO: N/A**	
Sample Rev:	01	Issue NO:	
Sample Issue Date:	AUG.13.2012	Quantity:	

1. SCOPE:

THIS SPECIFICATION DEFINES THE ELECTRICAL AND MECHANICAL CHARACTERISTICS OF THE DC BRUSHLESS AXIAL FLOW FAN. THE FAN MOTOR IS WITH SINGLE PHASES AND FOUR POLES.

2. CHARACTERS:

ITEM	DESCRIPTION
RATED VOLTAGE	12.0 VDC
OPERATION VOLTAGE	10.8 - 13.2 VDC
INPUT CURRENT	0.31 (MAX. 1.20) A **(CURRENT ON SAFETY LABEL 1.20A)**
INPUT POWER	3.72 (MAX. 14.40) W
SPEED (FAN ONLY)	7300±10% R.P.M.
SPEED (ON SINK)	7200±10% R.P.M.
MAX. AIR FLOW (AT ZERO STATIC PRESSURE)	0.878 (MIN. 0.790) M^3/MIN. 31.01 (MIN. 27.91) CFM
MAX. AIR PRESSURE (AT ZERO AIRFLOW)	13.79 (MIN. 11.17) mmH_2O 0.543 (MIN. 0.440) $inchH_2O$
ACOUSTICAL NOISE (AVG. ON SINK)	61.0 (MAX. 65.0) dB-A
INSULATION TYPE	UL: CLASS A

(continued)

PART NO: 3620936511

DELTA MODEL: AFB0612DH-BC01

INSULATION STRENGTH	10 MEG OHM MIN. AT 500 VDC (BETWEEN FRAME AND (+) TERMINAL)
DIELECTRIC STRENGTH	5 mA MAX. AT 500 VAC 50/60 Hz ONE MINUTE, (BETWEEN FRAME AND (+) TERMINAL)
EXTERNAL COVER	OPEN TYPE
LIFE EXPECTANCE (AT LABEL VOLTAGE)	80,000 HOURS CONTINOUS OPERATION AT 45 °C WITH 15 ~ 65 %RH.
ROTATION	CLOCKWISE VIEW FROM NAME PLATE SIDE
OVER CURRENT SHUT DOWN	THE CURRENT WILL SHUT DOWN WHEN LOCKING ROTOR.
LEAD WIRE	UL 10368 -F- AWG #24 BLACK WIRE:NEGATIVE (-) YELLOW WIRE:POSITIVE (+) GREEN WIRE:TACHOMETER OUTPUT (F00) BLUE WIRE:SPEED CONTROL (PWM)

NOTES:
1. ALL READINGS ARE MEASURED AFTER STABLY WARMING UP THROUGH 10 MINUTES.
2. THE VALUES WRITTEN IN PARENS , ( ), ARE LIMITED SPEC.
3. ACOUSTICAL NOISE MEASURING CONDITION:

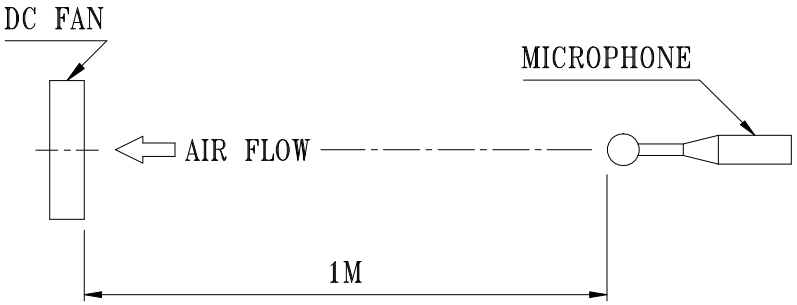

NOISE IS MEASURED AT RATED VOLTAGE IN FREE AIR IN ANECHOIC CHAMBER WITH B & K SOUND LEVEL METER WITH MICROPHONE AT A DISTANCE OF ONE METER FROM THE FAN INTAKE.

PART NO: 3620936511

DELTA MODEL: AFB0612DH-BC01

3. MECHANICAL:

3-1. DIMENSIONS ---------- SEE DIMENSIONS DRAWING

3-2. FRAME ---------- PLASTIC UL: 94V-0

(THE CONTACT OF HALOGEN LESS THAN 1500 PPM FOR USING EDX ...ETC)

3-3. IMPELLER ---------- PLASTIC UL: 94V-0

(THE CONTACT OF HALOGEN LESS THAN 1500 PPM FOR USING EDX ...ETC)

3-4. BEARING SYSTEM ---------- TWO BALL BEARING

3-5. WEIGHT ---------- 85 GRAMS

4. ENVIRONMENTAL:

4-1. OPERATING TEMPERATURE ---------- -10 TO +70 DEGREE C

4-2. STORAGE TEMPERATURE ---------- -30 TO +85 DEGREE C

4-3. OPERATING HUMIDITY --- 85% RELATIVE HUMIDITY WITH 55 DEGREE C

4-4. STORAGE HUMIDITY ---------- 5 TO 95 % RH

5. PROTECTION:

5-1. LOCKED ROTOR PROTECTION

IMPEDANCE OF MOTOR WINDING PROTECTS MOTOR FROM FIRE IN 96 HOURS OF LOCKED ROTOR CONDITION AT THE RATED VOLTAGE.

5-2. POLARITY PROTECTION

BE CAPABLE OF WITHSTANDING IF REVERSE CONNECTION FOR POSITIVE AND NEGATIVE LEADS.

6. RE OZONE DEPLETING SUBSTANCES:

6-1. NO CONTAINING PBBs, PBBOs, CFCs, PBBEs, PBDPEs AND HCFCs.

7. PRODUCTION LOCATION

7-1. PRODUCTS WILL BE PRODUCED IN CHINA OR TAILAND OR TAIWAN.

PART NO: 3620936511

DELTA MODEL: AFB0612DH-BC01

8. P & Q CURVE:

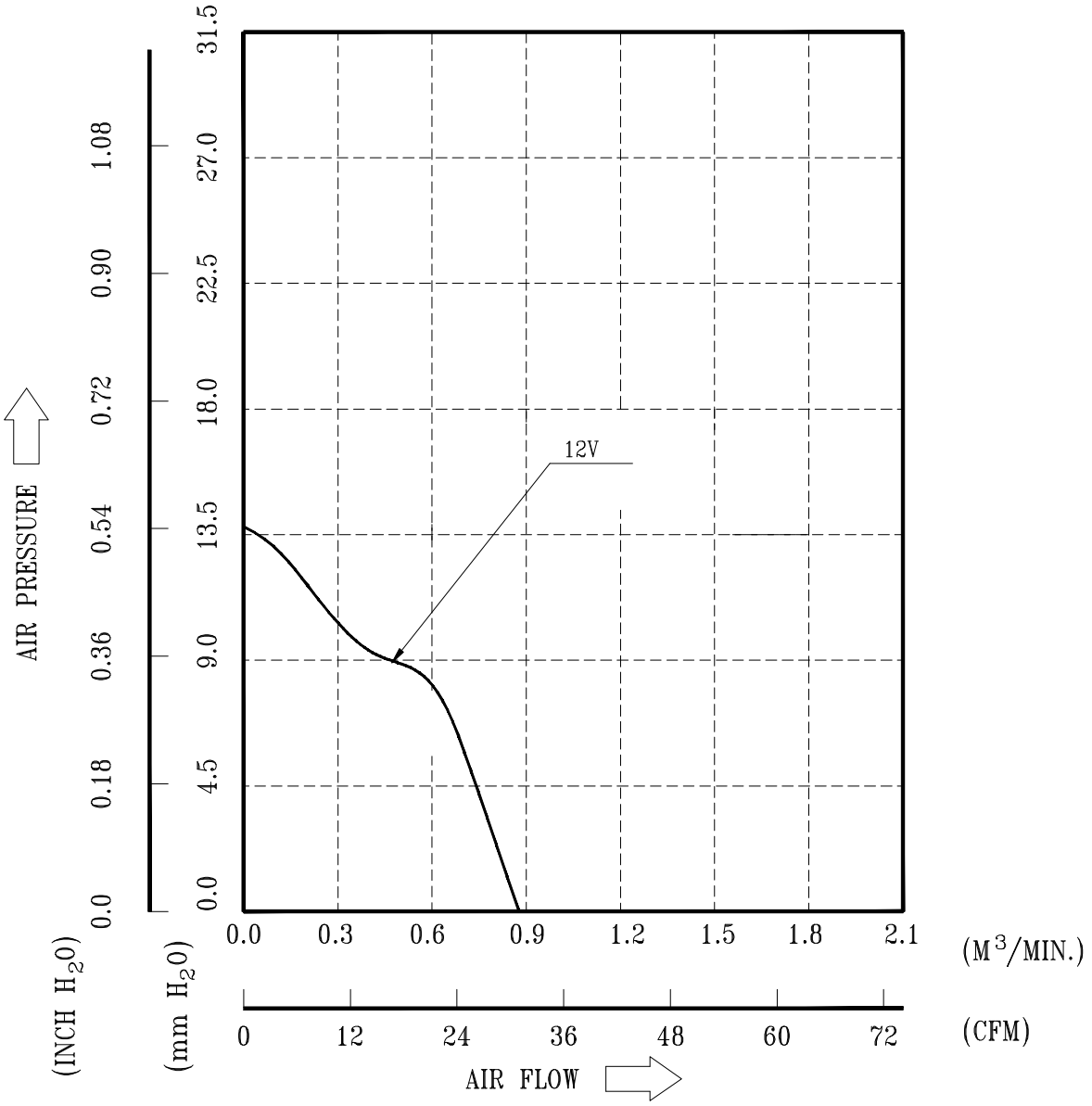

* TEST CONDITION: INPUT VOLTAGE ----- OPERATION VOLTAGE
TEMPERATURE ------ ROOM TEMPERATURE
HUMIDITY ---------- 65%RH

A00

PART NO: 3620936511

DELTA MODEL: AFB0612DH-BC01

9. DIMENSION DRAWING:

LABEL:

OR

OR

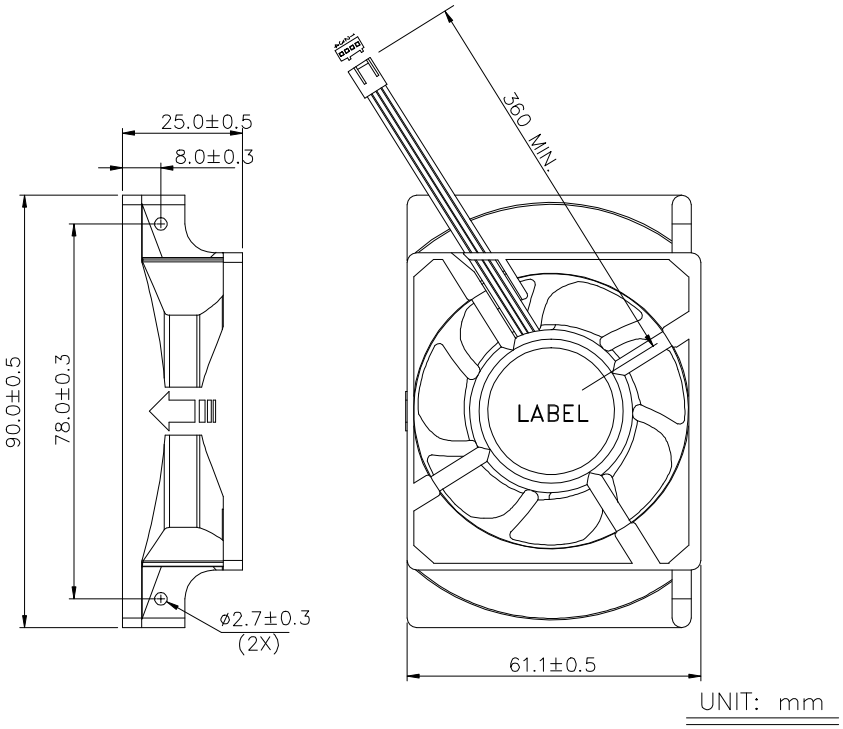

NOTES : 1. LEAD WIRE: UL 10368 -F- AWG #24
PIN 1: BLACK WIRE: NEGATIVE (-)
PIN 2: YELLOW WIRE: POSITIVE (+)
PIN 3: GREEN WIRE: TACHOMETER OUTPUT (F00)
PIN 4: BLUE WIRE: SPEED CONTROL (PWM)

2. HOUSING : MOLEX 47054-1000 OR EQUIVALENT

3. TERMINAL : MOLEX 2759T 08-50-0113 OR EQUIVALENT

4. THIS PRODUCT IS RoHS COMPLIANT

5. DELTA'S RESTRICTIONS ON HALOGEN APPLY ONLY TO BROMINATED AND CHLORINATED COMPOUNDS. NO OTHER HALOGEN IS RESTRICTED. SUBSTANCES RESTRICTIONS FOR HALOGEN-FREE (INCLUDE FAN PLASTIC PARTS, PWB BOARD, IC, ELECTRICAL MATERIALS & CABLE ASSY),
a. BROMINE(Br) < 900 PPM,
b. CHLORINE(Cl) < 900 PPM
c. (Br) + (Cl) < 1500 PPM.

10. FREQUENCY GENERATOR (FG) SIGNAL:

10-1. OUTPUT CIRCUIT - OPEN DRAIN MODE:

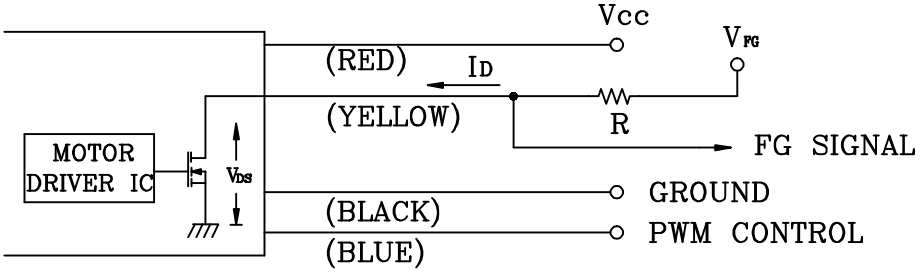

CAUTION: THE FG SIGNAL LEAD WIRE MUST BE KEPT AWAY FROM "+" LEAD WIRE & "−" LEAD WIRE.

10-2. SPECIFICATION:

V_{DS} (LINEAR)=0.5V MAX. V_{FG} =5.0V TYP. (Vcc MAX.)

I_D =5mA MAX. $R \geq V_{FG}/I_D$

10-3. FREQUENCY GENERATOR WAVEFORM:

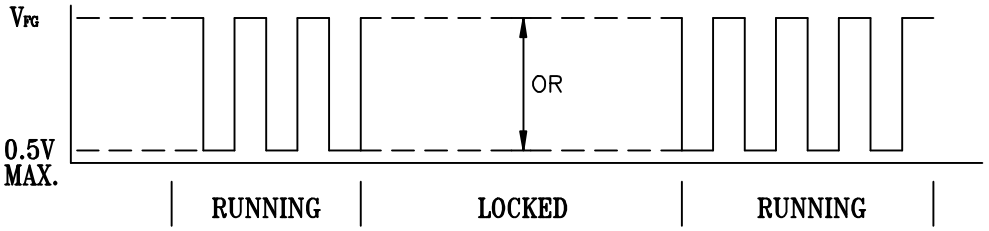

FAN RUNNING FOR 4 POLES

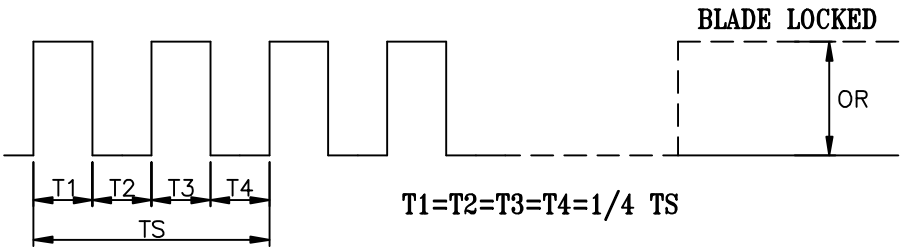

T1=T2=T3=T4=1/4 TS

N=R.P.M
TS=60/N(SEC)
*VOLTAGE LEVEL AFTER BLADE LOCKED
*4 POLES

A00

11. PWM CONTROL SIGNAL:

SIGNAL VOLTAGE RANGE: 0~5.25 VDC

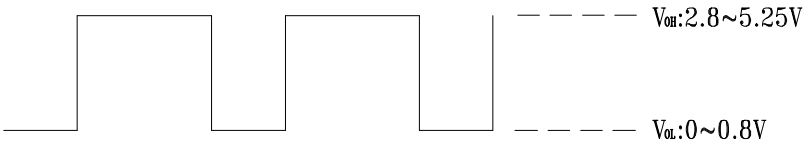

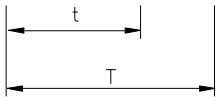

DUTY CYCLE= $\frac{t}{T}$ *100(%)

- THE FREQUENCY FOR CONTROL SIGNAL OF THE FAN SHALL BE ABLE TO ACCEPT A 21KHZ~28KHZ.
- THE PREFERRED OPERATING POINT FOR THE FAN IS 25K HZ.
- AT 100% DUTY CYCLE,THE ROTOR WILL SPIN AT MAXIMUM SPEED.
- AT 0~10% DUTY CYCLE,THE ROTOR WILL SPIN AT MINIIMUM SPEED.
- WITH CONTROL SIGNAL LEAD DISCONNECTED,THE FAN WILL SPIN AT MAXIMUM SPEED.

12. SPEED VS PWM CONTROL SIGNAL:

(AT 25°C, RATED VOLTAGE & PWM SIGNAL AS FOLLOW)

DUTY CYCLE (%)	FAN ONLY		FAN ON SINK	
	SPEED (R.P.M.)	CURRENT (A) TYP.	SPEED (R.P.M.)	CURRENT (A) TYP.
100	7300±10%	0.31	7200±10%	0.31
0~10	1000±250	0.03	1000±250	0.03

* PWM SIGNAL

PWM FREQUENCY = 25KHz

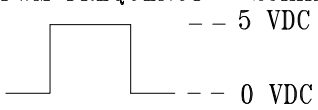

- MIN. START DUTY CYCLE : 30%.
  WHEN DUTY CYCLE IS SET FOR MORE THAN 30%, THE FAN WILL BE ABLE TO START FROM A DEAD STOP.

13. PWM CONTROL LEAD WIRE INPUT IMPEDANCE:

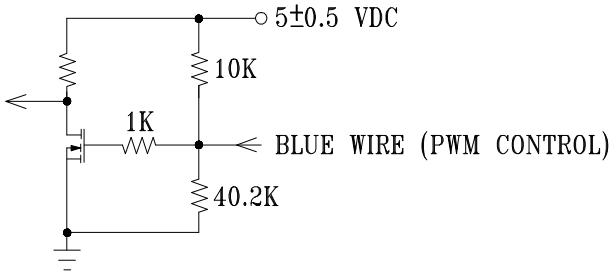

Application Notice

1. Delta will not guarantee the performance of the products if the application condition falls outside the parameters set forth in the specification.
2. A written request should be submitted to Delta prior to approval if deviation from this specification is required.
3. Please exercise caution when handling fans. Damage may be caused when pressure is applied to the impeller, if the fans are handled by the lead wires, or if the fan was hard-dropped to the production floor.
4. Except as pertains to some special designs, there is no guarantee that the products will be free from any such safety problems or failures as caused by the introduction of powder, droplets of water or encroachment of insect into the hub.
5. The above-mentioned conditions are representative of some unique examples and viewed as the first point of reference prior to all other information.
6. It is very important to establish the correct polarity before connecting the fan to the power source. Positive (+) and Negative (-). Damage may be caused to the fans if connection is with reverse polarity, if there is no foolproof method to protect against such error specifically mentioned in this spec.
7. Delta fans without special protection are not suitable where any corrosive fluids are introduced to their environment.
8. Please ensure all fans are stored according to the storage temperature limits specified. Do not store fans in a high humidity environment. We highly recommend performance testing is conducted before shipping, if the fans have been stored over 6 months.
9. Not all fans are provided with the Lock Rotor Protection feature. If you impair the rotation of the impeller for the fans that do not have this function, the performance of those fans will lead to failure.
10. Please be cautious when mounting the fan. Incorrect mounting of fans may cause excess resonance, vibration and subsequent noise.
11. It is important to consider safety when testing the fans. A suitable fan guard should be fitted to the fan to guard against any potential for personal injury.
12. Except where specifically stated, all tests are carried out at room (ambient) temperature and relative humidity conditions of 25°C, 65% RH. The test value is only for fan performance itself.
13. Be certain to connect an " 4.7µF or greater" capacitor to the fan externally when the application calls for using multiple fans in parallel, to avoid any unstable power.