SHEET OF

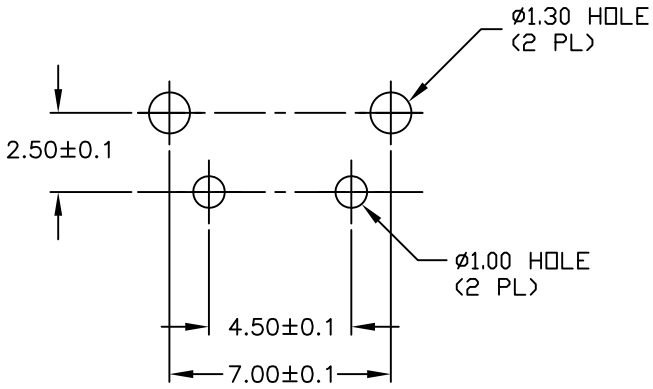

RECOMMENDED P.C.B. LAYOUT

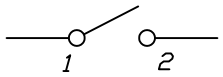

CIRCUIT: SPST

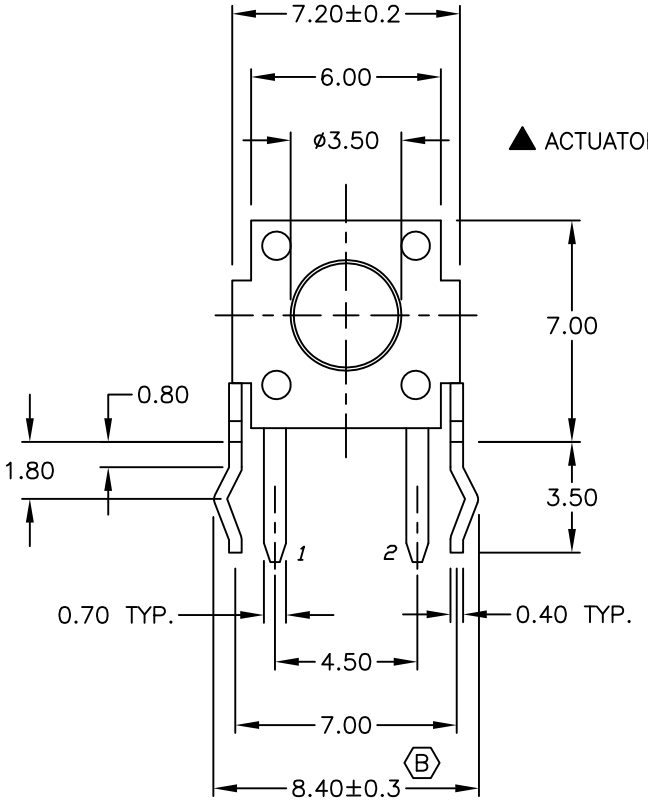

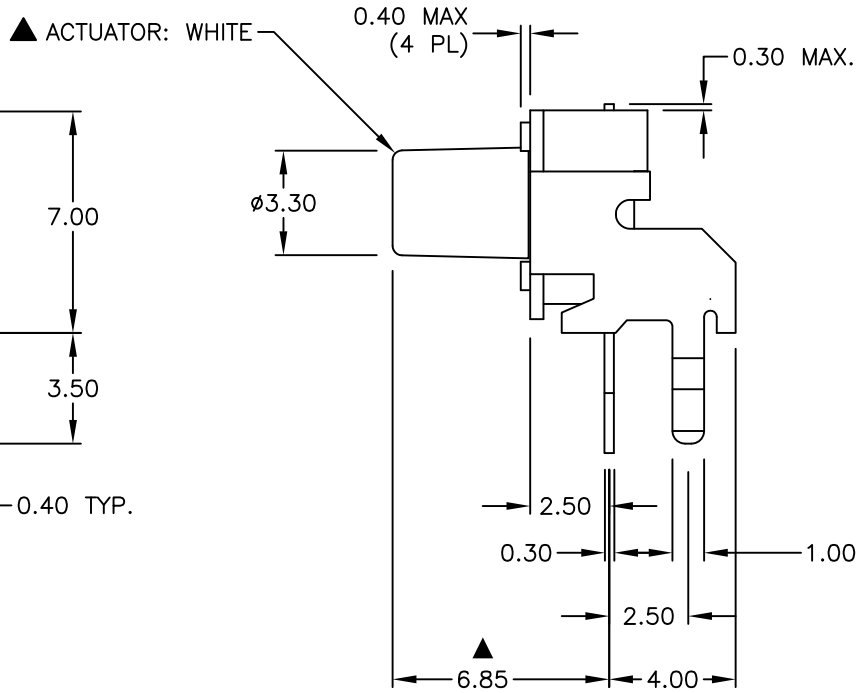

NOTES:

1. ALL DIMENSIONS IN MM
2. GENERAL TOLERANCE: X.X=±0.4
   X.XX=±0.25
3. TERM. NOS. FOR REF. ONLY
4. RATING: 50mA, @12V DC
5. TRAVEL: 0.25±0.1mm
6. ▲ OPERATING FORCE: 160±50gf
7. CONTACT RESISTANCE: 100 milliohms Max.
8. ELECTRICAL LIFE: 100,000 CYCLES MIN.
9. ▲ DESIGNATE MAJOR FEATURE
10. ▲ MATERIAL: NYLON 6/6 TO WITHSTAND SOLDERING TEMP. OF 260°C MAX. FOR 30 SECONDS
11. BOTH STEM AND BODY TO BE UL94V-0
12. 2002/95/EC (ROHS) COMPLIANT
13. ▲ ACTUATOR COLOR: WHITE (NATURAL NYLON)

REV.	ECN No.	DESCRIPTION	DATE	CHKD
C	21583	CHANGE TITLE TO MATCH QAD	9/17/14	EBP
B	18128	ONE TOLERANCE WAS +/- 0.1	6/9/08	BLR
A	15932	RELEASED	4/4/06	PH

THE INFORMATION CONTAINED IN THIS DOCUMENT IS PROPRIETARY TO E-SWITCH AND IS NOT TO BE COPIED OR TRANSFERRED

P:\ESEngineering\STANDARDS\BORDERS\Logo ESwitch BVlmp

TITLE: TL1105MF160Q94VOWHTACT ©

SCALE	DATE	DR	DWG	REV
4:1	4/4/06	PH	P020237	C